A. S. A. E. Standardized 3,000 P.S.I. Double Acting 3" X 8" Cylinder Illustrated

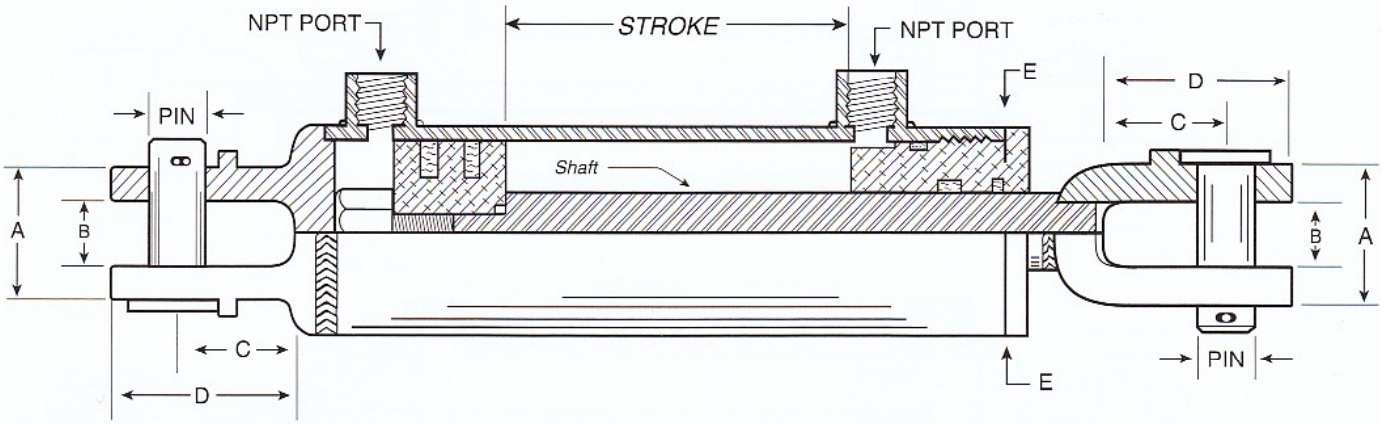

MODEL No.	IT 15x8	IT 2x8	IT 25x8	IT 3x8	IT 35x8	IT 4x8	IT 5x8	ITB 5x8	ITB 6x8
BORE DIAMETER	1 1/2"	2"	2 1/2"	3"	3 1/2"	4"	5"	5"	6"
STROKE	8"	8"	8"	8"	8"	8"	8"	8"	8"
LENGTH RETRACTED				20 1/4"				23 1/2"	23 1/2"
LENGTH EXTENDED				28 1/4"				31 1/2"	31 1/2"
FORCE PER 100 P.S.I. PUMP PRESSURE									
PUSH	177"	314	490	706	962	1256	1963	1963	2857
PULL	98"	215	378	558	785	1049	1649	1649	2429
PIN SIZE	1"	1"	1"	1"	1"	1"	1"	1 1/4"	1 1/4"
SHAFT DIAMETER	1"	11/8"	1 1/4"	1 3/8"	1 1/2"	1 5/8"	2"	2"	2 1/4"
N. P. T. PORT	3/8"	3/8"	3/8"	1/2"	1/2"	1/2"	3/4"	3/4"	3/4"
OTHER DIMENSIONS:									
A	1 7/8"	1 7/8"	2 1/2"	2 1/2"	2 1/2"	2 1/2"	2 1/2"	2 1/2"	2 1/2"
B	1 1/8"	1 1/8"	1 1/8"	1 1/8"	1 1/8"	1 1/8"	1 1/8"	1 1/8"	1 1/8"
C	2"	2"	1 7/8"	1 7/8"	1 7/8"	1 7/8"	1 7/8"	1 7/8"	1 7/8"
D	3"	3"	3 1/4"	3 1/4"	3 1/4"	3 1/4"	3 1/2"	3 1/2"	3 1/2"
E	2 1/8"	2 3/8"	2 7/8"	3 1/2"	4"	4 1/2"	5 3/4"	6 3/4"	

LARGER SIZES AVAILABLE!

Also Available in any size stroke, rod size, port, seal, mounting, or material.